ISL15102

Single Port, PLC Differential Line Driver

FN8823
Rev.1.00
May 3, 2018

The ISL15102 is a single port differential line driver developed for Power Line Communication (PLC) applications. The device is designed to drive heavy line loads while maintaining a high level of linearity required in Orthogonal Frequency Division Multiplexing (OFDM) PLC modem links.

The ISL15102 has a disable control pin (DIS). In Disable mode, the line driver goes into Low Power mode and the outputs maintain a high impedance in the presence of high receive signal amplitude, improving TDM receive signal integrity.

The ISL15102 has built-in thermal protection. When the internal temperature reaches +150°C (typical) the driver shuts down to prevent damage to the device.

An internal input CM buffer maximizes the dynamic range and reduces the number of external components in the application circuit.

The ISL15102 is supplied in a thermally-enhanced small footprint (4mm x 5mm) 24 Ld QFN package. The ISL15102 is specified for operation across the -40°C to +85°C operating ambient temperature range.

Related Literature

For a full list of related documents, visit our website

- ISL15102 product page

Features

- Single differential driver
- Internal V_{CM}
- 90MHz signal bandwidth
- 900V/µs slew rate
- Single +8V to +28V supply, absolute maximum 30V
- Supports narrowband and broadband DMT PLC
- -86dB THD at 200kHz in to 50Ω line load
- -70dB THD at 3MHz in to 50Ω line load
- Control pin for enable/disable for TDM operation
- Thermal shutdown

Applications

- Power line communication differential driver

Table 1. Alternate Solutions

Part #	Nominal $\pm V_S$ (V)	Bandwidth (MHz)	Applications
ISL15100	±6, +12	180	Broadband PLC
ISL1571	±6, +12	250	Broadband PLC
ISL15110	±6, +12	120	MIMO PLC

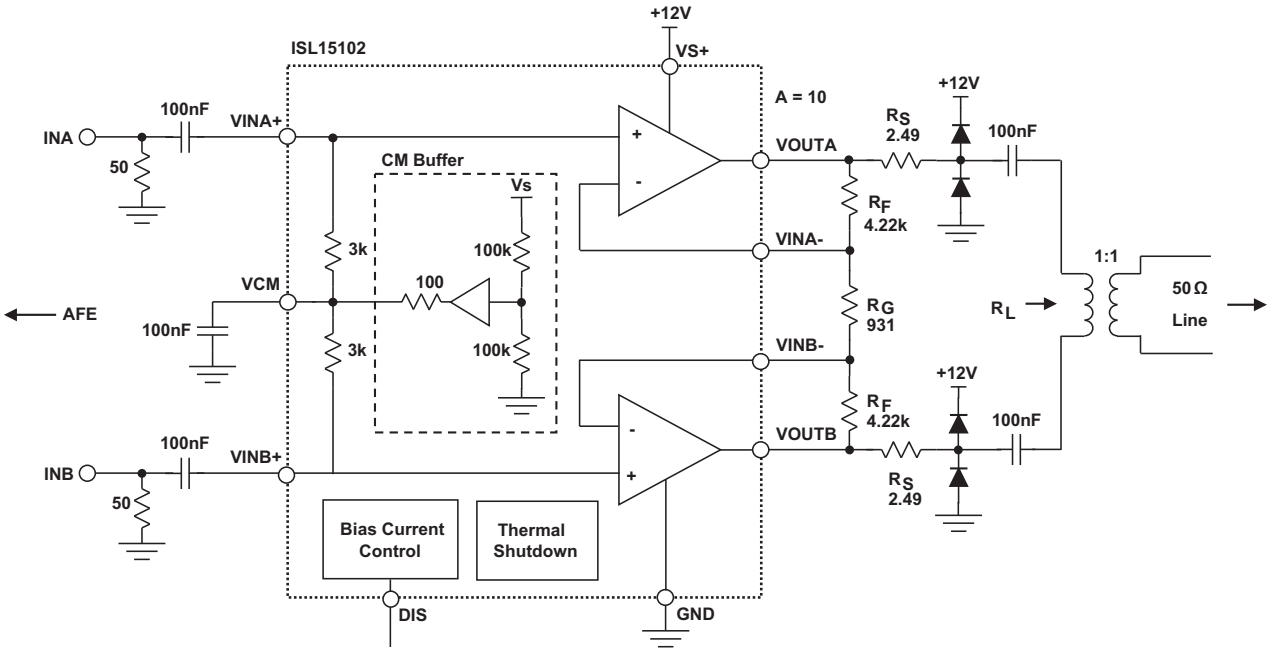

Figure 1. Typical Application Circuit

1. Overview

1.1 Ordering Information

Part Number (Notes 2, 3)	Part Marking	Operating Ambient Temp Range (°C)	Tape and Reel (Units) (Note 1)	Package (RoHS Compliant)	Pkg. Dwg. #
ISL15102IRZ	15102IRZ	-40 to +85	-	24 Ld QFN	L24.4x5F
ISL15102IRZ-T13	15102IRZ	-40 to +85	2.5k	24 Ld QFN	L24.4x5F
ISL15102IRZ-EVALZ					

Notes:
1. Refer to TB347 for details about reel specifications.
2. These Pb-free plastic packaged products employ special Pb-free material sets, molding compounds/die attach materials, and 100% matte tin plate plus anneal (e3 termination finish, which is RoHS compliant and compatible with both SnPb and Pb-free soldering operations). Pb-free products are MSL classified at Pb-free peak reflow temperatures that meet or exceed the Pb-free requirements of IPC/JEDEC J STD-020.
3. For Moisture Sensitivity Level (MSL), see the ISL15102 product information page. For more information about MSL, refer to TB363.

1.2 Pin Configuration

ISL15102
(24 Ld QFN)

Internal View

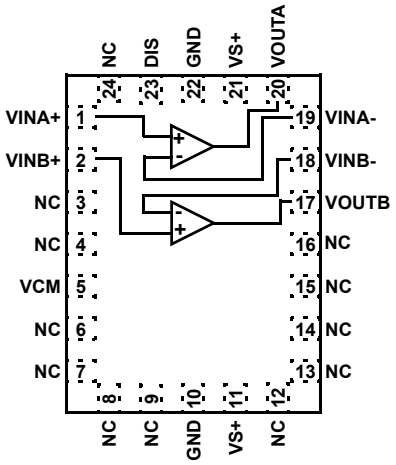

Top View

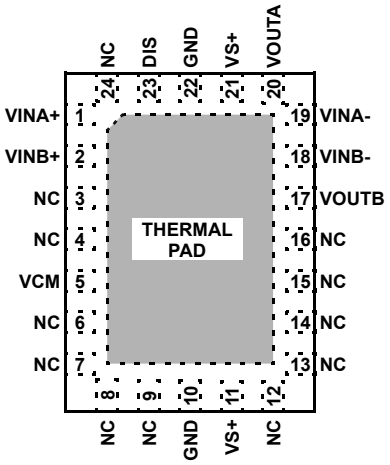

1.3 Pin Descriptions

Pin Number	Pin Name	Function	Circuit
1	VINA+	Amplifier A non-inverting input	Refer to Circuit 1
2	VINB+	Amplifier B non-inverting input	Refer to Circuit 1
3, 4, 6, 7, 8, 9, 12, 13, 14, 15, 16, 24	NC	No internal connection	
10, 22	GND	Ground connection	
5	VCM	Output common-mode bias	
11, 21	VS+	Positive supply voltage	
17	VOUTB	Amplifier B output	Refer to Circuit 2
18	VINB-	Amplifier B inverting input	Refer to Circuit 3
19	VINA-	Amplifier A inverting input	Refer to Circuit 3
20	VOUTA	Amplifier A output	Refer to Circuit 2
23	DIS	Disable control pin	
-	Thermal Pad	Connects to GND	

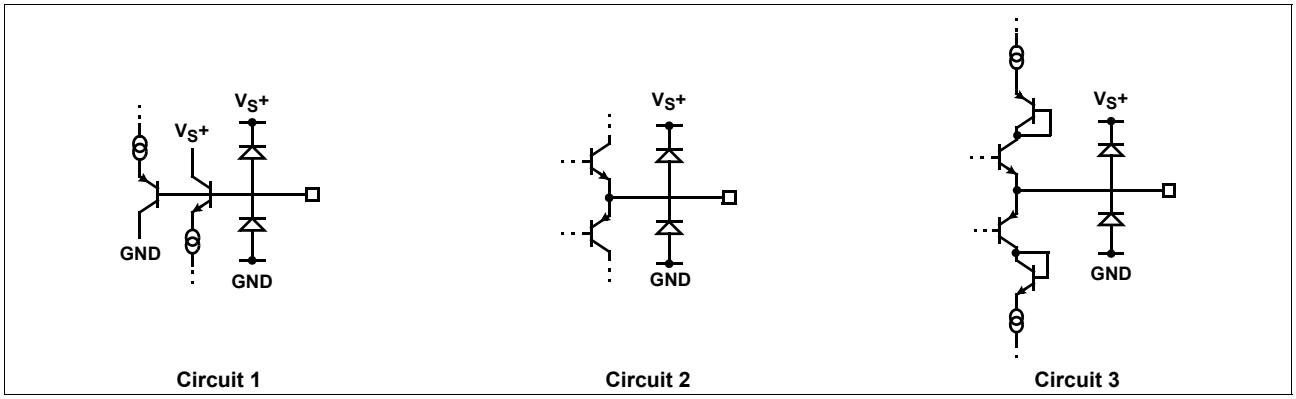

Circuit 1 Circuit 2 Circuit 3

2. Specifications

2.1 Absolute Maximum Ratings

T_A = +25°C

Parameter	Minimum	Maximum	Unit
V_S+ Voltage to GND	-0.3	30	V
Driver V_{IN}+ Voltage	GND	V_S+	V
DIS Voltage to GND	-0.3	6	V
V_{CM} Voltage to GND	GND	V_S+	
ESD Rating	**Value**		**Unit**
Human Body Model (Tested per JS-001-2014)	2		kV
Charged Device Model (Tested per JS-002-2014)	750		V

CAUTION: Do not operate at or near the maximum ratings listed for extended periods of time. Exposure to such conditions may adversely impact product reliability and result in failures not covered by warranty.

2.2 Thermal Information

Thermal Resistance (Typical)	θ_{JA} (°C/W)	θ_{JC} (°C/W)
24 Ld QFN Package (Notes 4, 5)	38	4

Notes:

4. θ_{JA} is measured in free air with the component mounted on a high-effective thermal conductivity test board with “direct attach” features. See TB379.
5. For θ_{JC}, the “case temp” location is the center of the exposed metal pad on the package underside.

Parameter	Minimum	Maximum	Unit
Storage Temperature Range	-65	+150	°C
Power Dissipation	See Figure 14 on page 9		
Pb-Free Reflow Profile	Refer to TB493		

2.3 Recommended Operation Conditions

Parameter	Minimum	Maximum	Unit
Temperature Range	-40	+85	°C
Junction Temperature	-40	+150	°C

2.4 Electrical Specifications

Unless otherwise noted, all tests are at the specified temperature T_A = +25°C, V_S+ = +12V, A_V = 10V/V, R_F = 4.22kΩ, R_L = 50Ω differential, DIS = 0V.

Parameter		Symbol	Test Conditions	Min (Note 6)	Typ (Note 7)	Max (Note 6)	Unit
AC Performance							
-3dB Small Signal Bandwidth		BW	$V_O < 2V_{P-P-DIFF}$		90		MHz
-3dB Large Signal Bandwidth			$V_O = 10V_{P-P-DIFF}$		60		MHz
20% to 80%		SR	$V_O = 10V_{P-P-DIFF}$		900		V/µs
200kHz Harmonic Distortion	2nd Harmonic		$V_{OUT} = 2V_{P-P-DIFF}$		-88		dBc
	3rd Harmonic		$V_{OUT} = 2V_{P-P-DIFF}$		-92		dBc
	THD		$V_{OUT} = 2V_{P-P-DIFF}$		-86		dBc
3MHz Harmonic Distortion	2nd Harmonic		$V_{OUT} = 2V_{P-P-DIFF}$		-83		dBc
	3rd Harmonic		$V_{OUT} = 2V_{P-P-DIFF}$		-70		dBc
	THD		$V_{OUT} = 2V_{P-P-DIFF}$		-70		dBc
6MHz Harmonic Distortion	2nd Harmonic		$V_{OUT} = 2V_{P-P-DIFF}$		-76		dBc
	3rd Harmonic		$V_{OUT} = 2V_{P-P-DIFF}$		-66		dBc
	THD		$V_{OUT} = 2V_{P-P-DIFF}$		-65		dBc
Non-Inverting Input Voltage Noise at each of the Two Inputs		e_N	f = 1MHz		8.5		nV/√Hz
Non-Inverting Input Current Noise at each of the Two Inputs		$+i_N$	f = 1MHz		1.5		pA/√Hz
Inverting Input Current Noise at each of the Two Inputs		$-i_N$	f = 1MHz		38		pA/√Hz
Common-Mode Output Noise		e_{N-CM}	f = 1MHz		128		nV/√Hz
Power Control Features							
Logic High Voltage		V_{IH}	DIS input	2.0			V
Logic Low Voltage		V_{IL}	DIS input			0.8	V
Logic High Current for DIS		I_{IH}	DIS = 3.3V		0.3		µA
Logic Low Current for DIS		I_{IL}	DIS = 0V		-0.4		µA
Supply Characteristics							
Maximum Operating Supply Voltage					28		V
Minimum Operating Supply Voltage					8		V
GND Pin Current		I_{GND}	All outputs at 0V, DIS = 3.3V		0.4		mA
Positive Supply Current		I_S+ (full power)	All outputs at V_S+/2, DIS = 0V V_{O-Diff} = 0V		21		mA
Positive Supply Current		I_S+ (power-down)	All outputs at V_S+/2, DIS = 3.3V, V_{O-Diff} = 0V		0.4		mA
Output Characteristics							
Unloaded Output Differential Swing		V_{OUT}	R_{L-DIFF} = no load		20		V_{P-P}
Input Characteristics							
Input Offset Voltage - Differential Mode		V_{IOS-DM}	(VINA+ - VINB+)	-17	-0.3	17	mV
Input Offset Voltage - Common-Mode		V_{IOS-CM}	Delta to V_S+/2	-17	4	17	mV

Unless otherwise noted, all tests are at the specified temperature T_A = +25°C, V_S+ = +12V, A_V = 10V/V, R_F = 4.22kΩ, R_L = 50Ω differential, DIS = 0V. **(Continued)**

Parameter	Symbol	Test Conditions	Min (Note 6)	Typ (Note 7)	Max (Note 6)	Unit
Input V_{OS} Drift	$V_{OS, DRIFT}$	-25°C to +125°C T_J		±2		µV/°C
Non-Inverting Input Bias Current - Differential Mode	$+I_{BDM}$	$(+I_{BA} - +I_{BB})$	-3	0.2	3	µA
Inverting Input Bias Current - Differential Mode	$-I_{BDM}$	$(-I_{BA} - -I_{BB})$	-20	-0.6	20	µA
Non-Inverting I_B+ Drift	$I_{B+, DRIFT}$	-25°C to +85°C T_J		±6		nA/°C
Inverting I_B- Drift	$I_{B-, DRIFT}$	-25°C to +85°C T_J		±6		nA/°C
Power Supply Rejections to Differential Output (Input Referred)	PSRR	V_S+ = +8V to +28V		68		dB
Power Supply Rejections to Common-Mode Output (Output Referred)		V_S+ = +8V to +28V		22		dB
Differential Input Resistance	Z_{IN}			6		kΩ
Thermal Protection						
Thermal Shutdown			+125	+160		°C

Notes:
6. Compliance to datasheet limits is assured by one or more methods: production test, characterization, and/or design.
7. Typical values are for information purposes only.

3. Typical Performance Curves

V_S+ = +12V, R_F = 4.22kΩ, A_V = 10V/V differential, R_L = 50Ω differential, T_A = +25°C, DIS = 0V, unless otherwise noted.

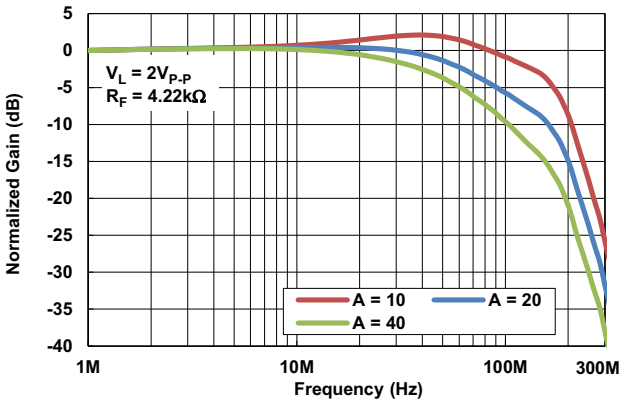

Figure 2. Small Signal Frequency Response vs Gain

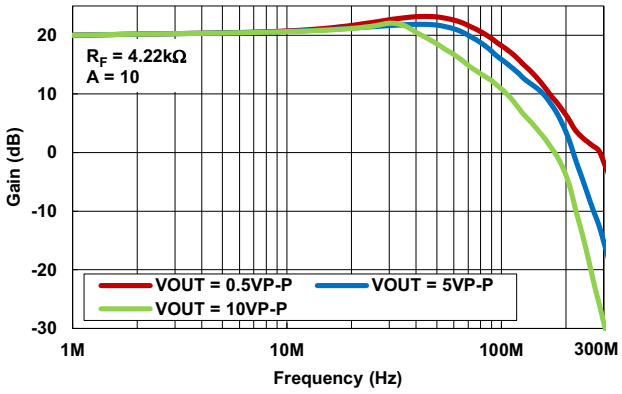

Figure 3. Large Signal Frequency Response

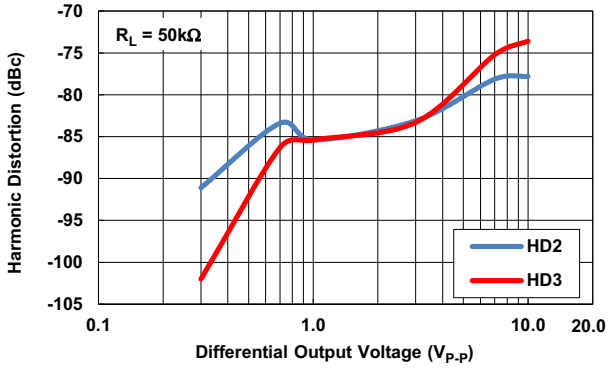

Figure 4. 1MHz Harmonic Distortion vs Output Swing

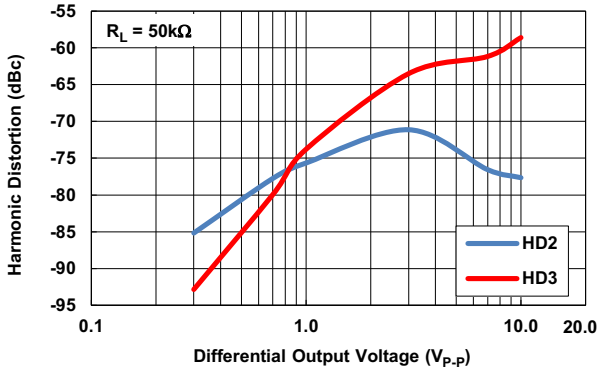

Figure 5. 4MHz Harmonic Distortion vs Output Swing

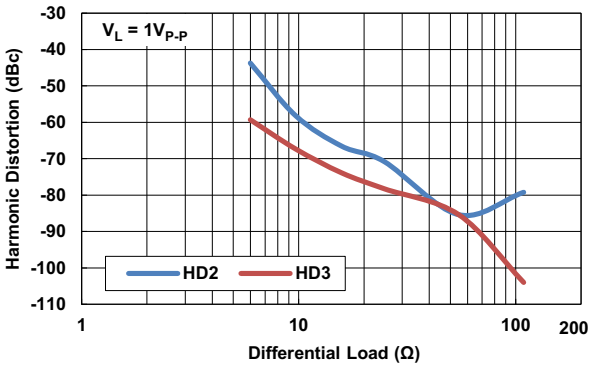

Figure 6. 1MHz Harmonic Distortion vs Load

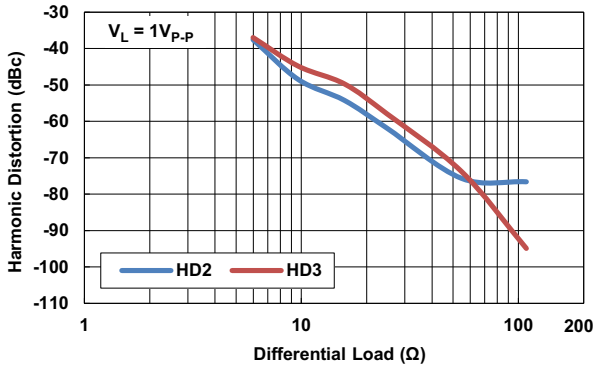

Figure 7. 4MHz Harmonic Distortion vs Load

V_S+ = +12V, R_F = 4.22kΩ, A_V = 10V/V differential, R_L = 50Ω differential, T_A = +25°C, DIS = 0V, unless otherwise noted. **(Continued)**

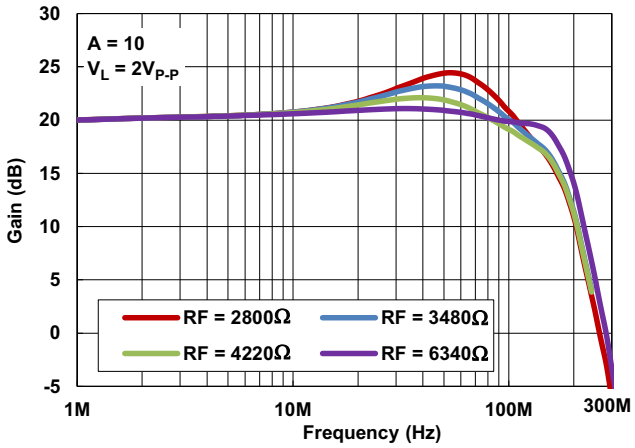

Figure 8. Small Signal Frequency Response vs R_F

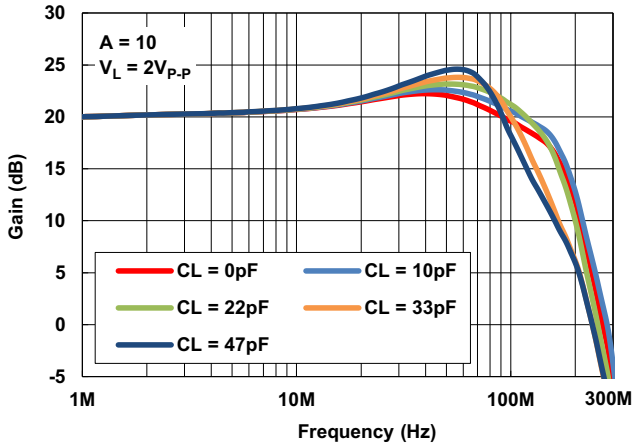

Figure 9. Small Signal Frequency Response vs C_{LOAD}

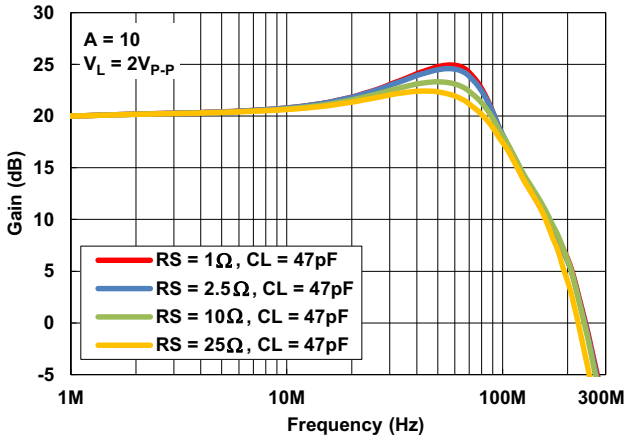

Figure 10. Small Signal Frequency Response vs R_S and C_{LOAD}

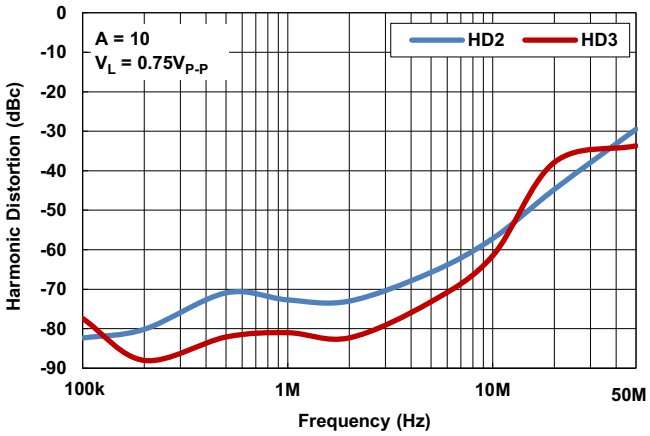

Figure 11. Harmonic Distortion vs Frequency

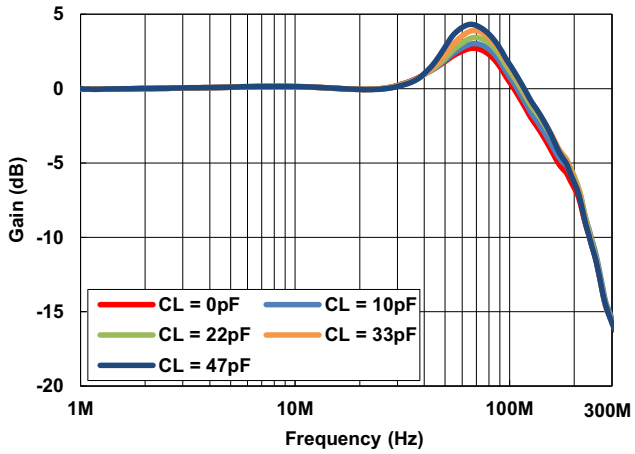

Figure 12. Common-Mode Small Signal Frequency Response vs C_{LOAD}

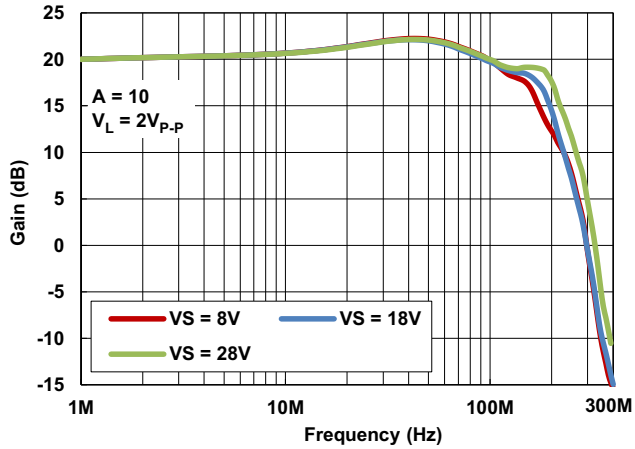

Figure 13. Small Signal Frequency Response vs Supply Voltage

V_S+ = +12V, R_F = 4.22kΩ, A_V = 10V/V differential, R_L = 50Ω differential, T_A = +25°C, DIS = 0V, unless otherwise noted. **(Continued)**

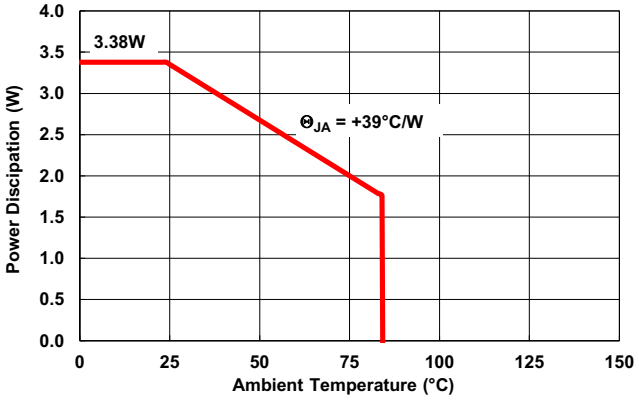

Figure 14. Package Power Dissipation vs Ambient Temperature

4. Test Circuit

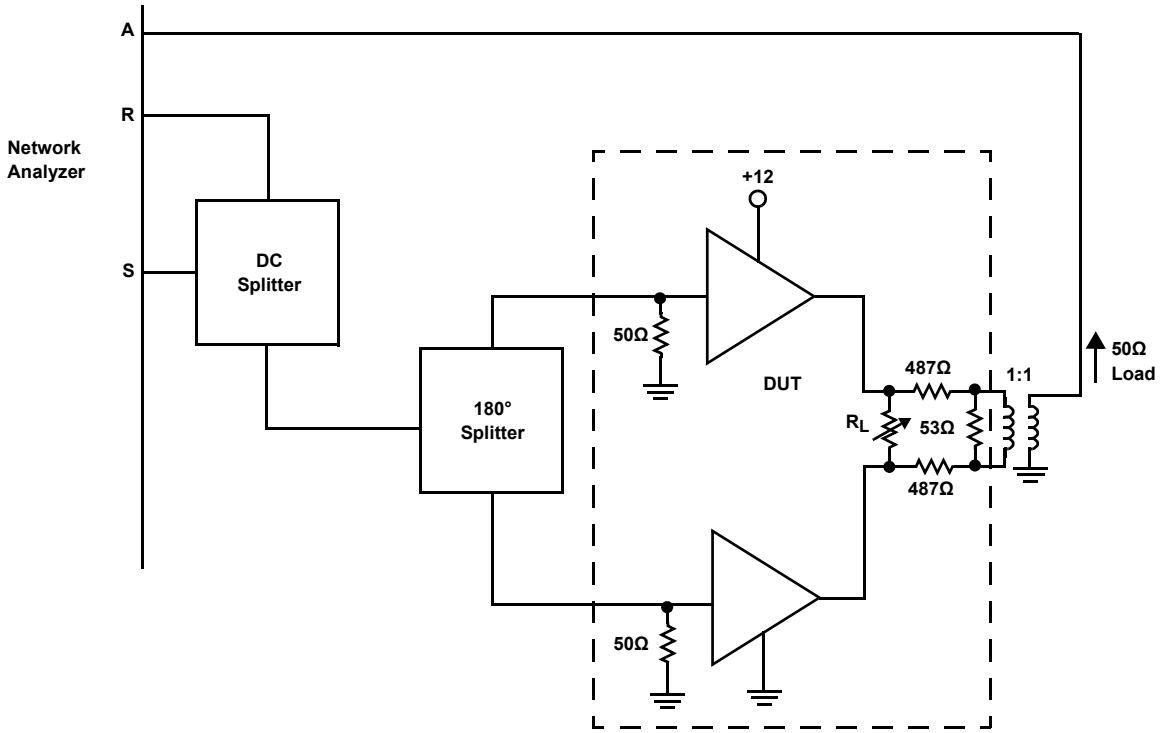

Figure 15. Frequency Response Characterization Circuit

5. Applications Information

5.1 Applying Wideband Current Feedback Op Amps as Differential Drivers

A Current Feedback Amplifier (CFA) such as the ISL15102 is particularly suited to the requirements of high output power, high bandwidth, and differential drivers. This topology offers a high slew rate on low quiescent power and the ability to hold AC characteristics relatively constant over a wide range of gains. The AC characteristics are principally set by the feedback resistor (R_F) value in simple differential gain circuits as shown in Figure 16.

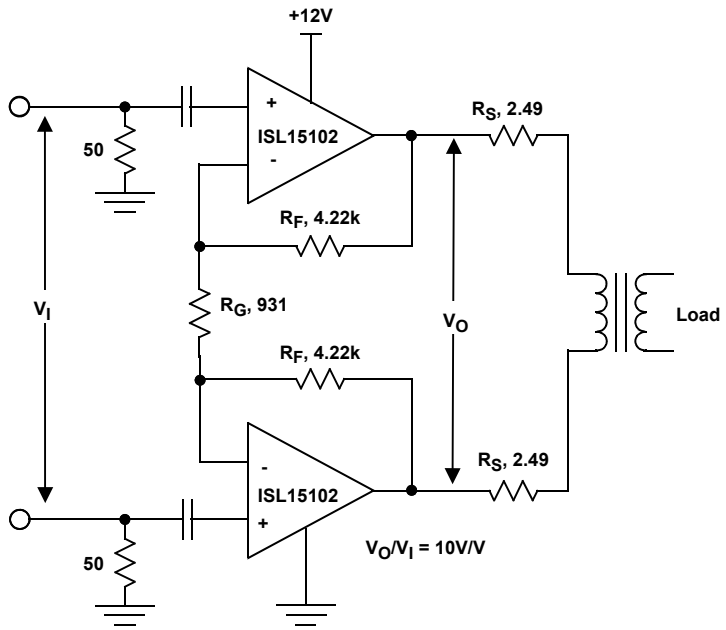

Figure 16. Passive Termination Circuit

In this differential gain of 10V/V circuit, the 4.22k feedback resistors (R_F) set the bandwidth, and the 931 gain resistor (R_G) controls the gain. The V_O/V_I gain for this circuit is set by Equation 1:

(EQ. 1) $$\frac{V_O}{V_I} = 1 + \left(2 \cdot \frac{R_F}{R_G}\right) = 1 + \left(2 \cdot \frac{4.22k\Omega}{931\Omega}\right) = 10.06$$

The effect of increasing or decreasing the feedback resistor value is shown in Figure 8 on page 8. Increasing R_F will tend to roll off the response, while decreasing it will peak the frequency response up, extending the bandwidth. R_G was adjusted in each of these plots to hold a constant gain of 10 (or 20dB). This shows the flexibility offered by the CFA topology; the frequency response can be controlled with the value of the feedback resistor, R_F, with resistor R_G setting the desired gain.

The ISL15102 provides two very power efficient, high output current CFAs. These are intended to be connected as one differential driver. The "Pin Configuration" on page 2 show that Channels A and B are intended to operate as a pair. Power-down control is provided through control pin DIS, which sets the power for Channels A and B together.

Very low output distortion at low power can be provided by the differential configuration. The high slew rate intrinsic to the CFA topology also contributes to the exceptional performance shown in Figure 11 on page 8. This swept frequency distortion plot shows low distortion at 200kHz holding to very low levels up through 10MHz.

5.2 Input Biasing and Input Impedance

The ISL15102 has internal resistors at the non-inverting inputs for mid-rail biasing, so only external AC coupling capacitors are required for input biasing, shown in Figure 1 on page 1. With a 100nF coupling capacitor and an input differential impedance of 6kΩ typical, the first order high-pass cut-off frequency is 530Hz.

5.3 Power Control Function

DIS controls the quiescent current for the port constructed from Amplifiers A and B. Taking DIS high (>2V), will put the device in Power-Down mode, reducing the supply current to typical 0.4mA. Taking DIS low (<0.8V), will place the drive in Full Power mode, consuming typically 22mA supply current. Table 2 summarizes the operation modes for the ISL15102.

Table 2. Power Modes of the ISL15102

DIS	Operation
0	I_S Full Power
1	Power-Down

6. Performance Considerations

6.1 Driving Capacitive Loads

All closed-loop op amps are susceptible to reduced phase margin when driving capacitive loads. This shows up as peaking in the frequency response that can, in extreme situations, lead to oscillations. The ISL15102 is designed to operate successfully with small capacitive loads such as layout parasitics. As the parasitic capacitance increases, it is best to consider a small resistor in series with each output to isolate the phase margin effects of the capacitor. Figure 9 on page 8 shows the effect of capacitive load on the differential gain-of-10 circuit. With 22pF on each output, we see about 3dB peaking. This will increase quickly at higher C_{LOADS}. If this degree of peaking is unacceptable, a small series resistor can be used to improve the flatness as shown in Figure 10 on page 8.

6.2 Board Design Recommendations

The feedback resistors need to be placed as close as possible to the output and inverting input pins to minimize parasitic capacitance in the feedback loop. Keep the gain resistor also very close to the inverting inputs for its port and minimize parasitic capacitances to ground or power planes as well.

Close placement of the supply decoupling capacitors will minimize parasitic inductance in the supply path. High frequency load currents are typically pulled through these capacitors, so close placement of 0.01µF capacitors on each of the supply pins will improve dynamic performance. Higher valued capacitors, 6.8µF typically, can be placed further from the package as they are providing more of the low frequency decoupling.

Connect the thermal pad for the ISL15102 to ground. It is recommended to fill the PCB metal beneath the thermal pad with a 3x3 array of vias to spread heat away from the package. The larger the PCB metal area, the lower the junction temperature of the device will be.

Although the ISL15102 is relatively robust in driving parasitic capacitive loads, it is always preferred to place any series output resistors as close as possible to the output pins. Then trace capacitance on the other side of that resistor will have a much smaller effect on loop phase margin.

Protection devices that are intended to steer large load transients away from the ISL15102 output stage and into the power supplies or ground should have a short trace from their supply connections into the nearest supply capacitor, or they should include their own supply capacitors to provide a low impedance path under fast transient conditions.

7. Revision History

Rev.	Date	Description
1.00	May 3, 2018	Added ISL15102IRZ-EVALZ to the Ordering Information table. Updated Figures 2-13 to correct formatting issues. Figure 14, changed Y-axis unit of measurement from dB to W. Removed About Intersil section Updated the disclaimer.
0.00	Dec 1, 2017	Initial release

8. Package Outline Drawing

For the most recent package outline drawing, see L24.4x5F.

L24.4x5F
24 Lead Quad Flat No-Lead Plastic Package
Rev 0, 5/14

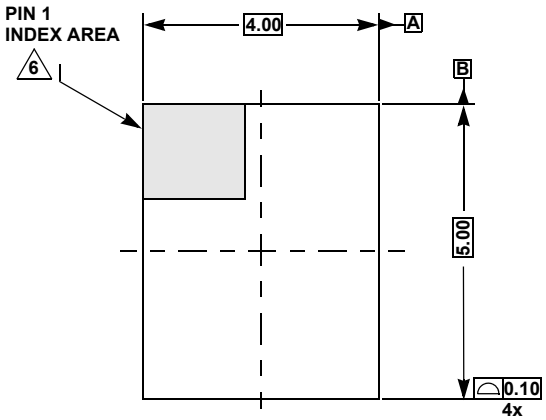

TOP VIEW

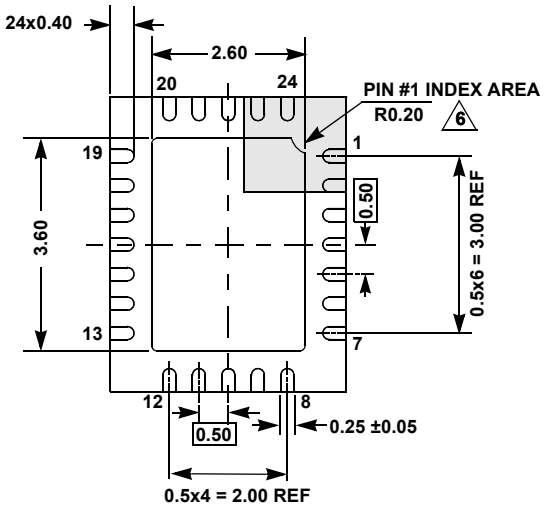

BOTTOM VIEW

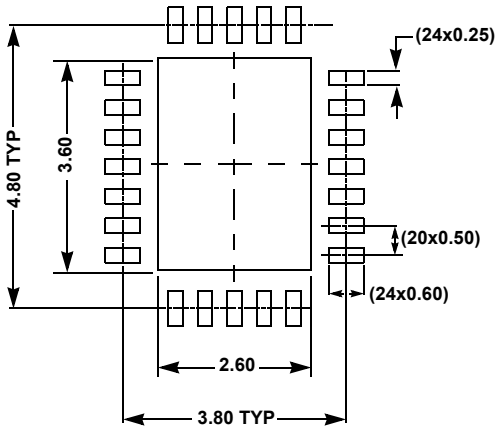

TYPICAL RECOMMENDED LAND PATTERN

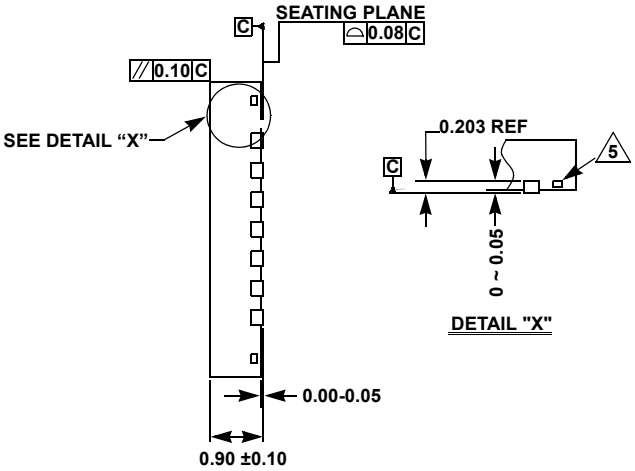

SIDE VIEW

NOTES:

1. Dimensions are in millimeters.
   Dimensions in ( ) are for Reference Only.
2. Dimensioning and tolerancing conform to ASMEY14.5m-1994.
3. Unless otherwise specified, tolerance: Decimal ± 0.05
4. Dimension applies to the metallized terminal and is measured between 0.20mm and 0.30mm from the terminal tip.
5. Tiebar shown (if present) is a non-functional feature.
6. The configuration of the pin #1 identifier is optional, but must be located within the zone indicated. The pin #1 identifier may be either a mold or mark feature.

Notice

1. Descriptions of circuits, software and other related information in this document are provided only to illustrate the operation of semiconductor products and application examples. You are fully responsible for the incorporation or any other use of the circuits, software, and information in the design of your product or system. Renesas Electronics disclaims any and all liability for any losses and damages incurred by you or third parties arising from the use of these circuits, software, or information.
2. Renesas Electronics hereby expressly disclaims any warranties against and liability for infringement or any other claims involving patents, copyrights, or other intellectual property rights of third parties, by or arising from the use of Renesas Electronics products or technical information described in this document, including but not limited to, the product data, drawings, charts, programs, algorithms, and application examples.
3. No license, express, implied or otherwise, is granted hereby under any patents, copyrights or other intellectual property rights of Renesas Electronics or others.
4. You shall not alter, modify, copy, or reverse engineer any Renesas Electronics product, whether in whole or in part. Renesas Electronics disclaims any and all liability for any losses or damages incurred by you or third parties arising from such alteration, modification, copying or reverse engineering.
5. Renesas Electronics products are classified according to the following two quality grades: “Standard” and “High Quality”. The intended applications for each Renesas Electronics product depends on the product’s quality grade, as indicated below.
   "Standard": Computers; office equipment; communications equipment; test and measurement equipment; audio and visual equipment; home electronic appliances; machine tools; personal electronic equipment; industrial robots; etc.
   "High Quality": Transportation equipment (automobiles, trains, ships, etc.); traffic control (traffic lights); large-scale communication equipment; key financial terminal systems; safety control equipment; etc.
   Unless expressly designated as a high reliability product or a product for harsh environments in a Renesas Electronics data sheet or other Renesas Electronics document, Renesas Electronics products are not intended or authorized for use in products or systems that may pose a direct threat to human life or bodily injury (artificial life support devices or systems; surgical implantations; etc.), or may cause serious property damage (space system; undersea repeaters; nuclear power control systems; aircraft control systems; key plant systems; military equipment; etc.). Renesas Electronics disclaims any and all liability for any damages or losses incurred by you or any third parties arising from the use of any Renesas Electronics product that is inconsistent with any Renesas Electronics data sheet, user’s manual or other Renesas Electronics document.
6. When using Renesas Electronics products, refer to the latest product information (data sheets, user’s manuals, application notes, “General Notes for Handling and Using Semiconductor Devices” in the reliability handbook, etc.), and ensure that usage conditions are within the ranges specified by Renesas Electronics with respect to maximum ratings, operating power supply voltage range, heat dissipation characteristics, installation, etc. Renesas Electronics disclaims any and all liability for any malfunctions, failure or accident arising out of the use of Renesas Electronics products outside of such specified ranges.
7. Although Renesas Electronics endeavors to improve the quality and reliability of Renesas Electronics products, semiconductor products have specific characteristics, such as the occurrence of failure at a certain rate and malfunctions under certain use conditions. Unless designated as a high reliability product or a product for harsh environments in a Renesas Electronics data sheet or other Renesas Electronics document, Renesas Electronics products are not subject to radiation resistance design. You are responsible for implementing safety measures to guard against the possibility of bodily injury, injury or damage caused by fire, and/or danger to the public in the event of a failure or malfunction of Renesas Electronics products, such as safety design for hardware and software, including but not limited to redundancy, fire control and malfunction prevention, appropriate treatment for aging degradation or any other appropriate measures. Because the evaluation of microcomputer software alone is very difficult and impractical, you are responsible for evaluating the safety of the final products or systems manufactured by you.
8. Please contact a Renesas Electronics sales office for details as to environmental matters such as the environmental compatibility of each Renesas Electronics product. You are responsible for carefully and sufficiently investigating applicable laws and regulations that regulate the inclusion or use of controlled substances, including without limitation, the EU RoHS Directive, and using Renesas Electronics products in compliance with all these applicable laws and regulations. Renesas Electronics disclaims any and all liability for damages or losses occurring as a result of your noncompliance with applicable laws and regulations.
9. Renesas Electronics products and technologies shall not be used for or incorporated into any products or systems whose manufacture, use, or sale is prohibited under any applicable domestic or foreign laws or regulations. You shall comply with any applicable export control laws and regulations promulgated and administered by the governments of any countries asserting jurisdiction over the parties or transactions.
10. It is the responsibility of the buyer or distributor of Renesas Electronics products, or any other party who distributes, disposes of, or otherwise sells or transfers the product to a third party, to notify such third party in advance of the contents and conditions set forth in this document.
11. This document shall not be reprinted, reproduced or duplicated in any form, in whole or in part, without prior written consent of Renesas Electronics.
12. Please contact a Renesas Electronics sales office if you have any questions regarding the information contained in this document or Renesas Electronics products.

(Note 1) “Renesas Electronics” as used in this document means Renesas Electronics Corporation and also includes its directly or indirectly controlled subsidiaries.

(Note 2) “Renesas Electronics product(s)” means any product developed or manufactured by or for Renesas Electronics.

(Rev.4.0-1 November 2017)

SALES OFFICES Renesas Electronics Corporation http://www.renesas.com

Refer to "http://www.renesas.com/" for the latest and detailed information.

Renesas Electronics America Inc.
1001 Murphy Ranch Road, Milpitas, CA 95035, U.S.A.
Tel: +1-408-432-8888, Fax: +1-408-434-5351

Renesas Electronics Canada Limited
9251 Yonge Street, Suite 8309 Richmond Hill, Ontario Canada L4C 9T3
Tel: +1-905-237-2004

Renesas Electronics Europe Limited
Dukes Meadow, Millboard Road, Bourne End, Buckinghamshire, SL8 5FH, U.K
Tel: +44-1628-651-700, Fax: +44-1628-651-804

Renesas Electronics Europe GmbH
Arcadiastrasse 10, 40472 Düsseldorf, Germany
Tel: +49-211-6503-0, Fax: +49-211-6503-1327

Renesas Electronics (China) Co., Ltd.
Room 1709 Quantum Plaza, No.27 ZhichunLu, Haidian District, Beijing, 100191 P. R. China
Tel: +86-10-8235-1155, Fax: +86-10-8235-7679

Renesas Electronics (Shanghai) Co., Ltd.
Unit 301, Tower A, Central Towers, 555 Langao Road, Putuo District, Shanghai, 200333 P. R. China
Tel: +86-21-2226-0888, Fax: +86-21-2226-0999

Renesas Electronics Hong Kong Limited
Unit 1601-1611, 16/F., Tower 2, Grand Century Place, 193 Prince Edward Road West, Mongkok, Kowloon, Hong Kong
Tel: +852-2265-6688, Fax: +852 2886-9022

Renesas Electronics Taiwan Co., Ltd.
13F, No. 363, Fu Shing North Road, Taipei 10543, Taiwan
Tel: +886-2-8175-9600, Fax: +886 2-8175-9670

Renesas Electronics Singapore Pte. Ltd.
80 Bendemeer Road, Unit #06-02 Hyflux Innovation Centre, Singapore 339949
Tel: +65-6213-0200, Fax: +65-6213-0300

Renesas Electronics Malaysia Sdn.Bhd.
Unit 1207, Block B, Menara Amcorp, Amcorp Trade Centre, No. 18, Jln Persiaran Barat, 46050 Petaling Jaya, Selangor Darul Ehsan, Malaysia
Tel: +60-3-7955-9390, Fax: +60-3-7955-9510

Renesas Electronics India Pvt. Ltd.
No.777C, 100 Feet Road, HAL 2nd Stage, Indiranagar, Bangalore 560 038, India
Tel: +91-80-67208700, Fax: +91-80-67208777

Renesas Electronics Korea Co., Ltd.
17F, KAMCO Yangjae Tower, 262, Gangnam-daero, Gangnam-gu, Seoul, 06265 Korea
Tel: +82-2-558-3737, Fax: +82-2-558-5338

© 2018 Renesas Electronics Corporation. All rights reserved.

Colophon 7.0

Mouser Electronics

Authorized Distributor

Click to View Pricing, Inventory, Delivery & Lifecycle Information:

Renesas Electronics:

ISL15102AIRZ-T13 ISL15102AIRZ